1" 1/2" 0" 1"

File: N:\dwg\Glenn County CA\ancsf-01A.dwg Layout: Figure A (2) User: James.ODonnell Jan 04, 2006 - 6:01pm

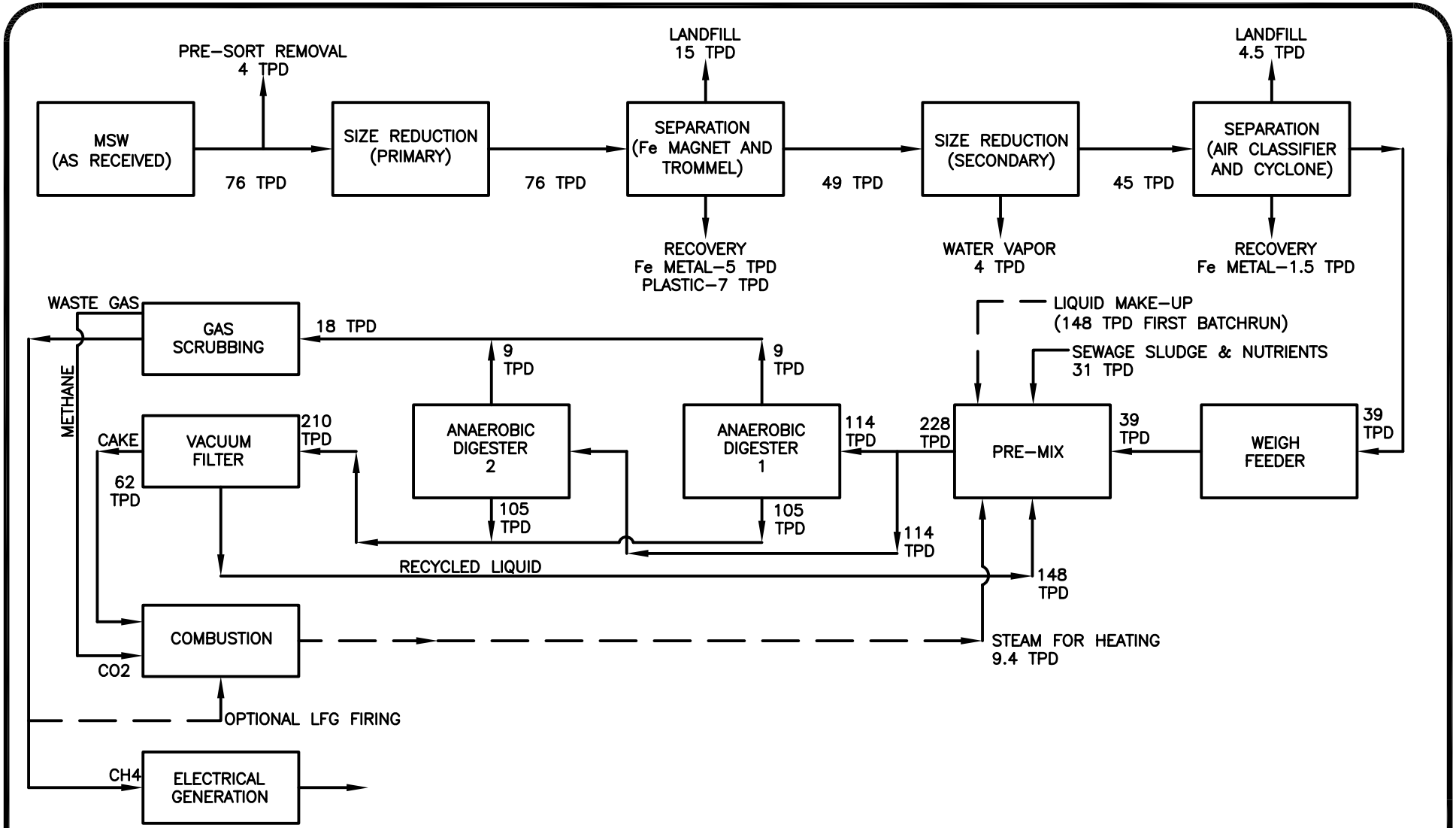

Shaw Environmental, Inc.

DATE 1/5/06
DWN J.O'D.
APP
REV
PROJECT NO.
116464

FIGURE A
GLENN COUNTY, CALIFORNIA
PROJECT
GLENN COUNTY, CALIFORNIA
ANAEROBIC DIGESTION OF MSW
BASED ON REFCOM